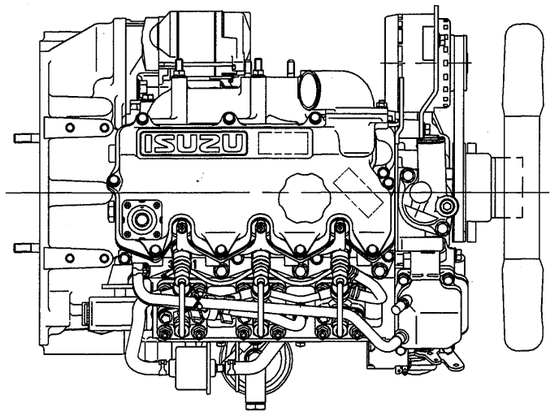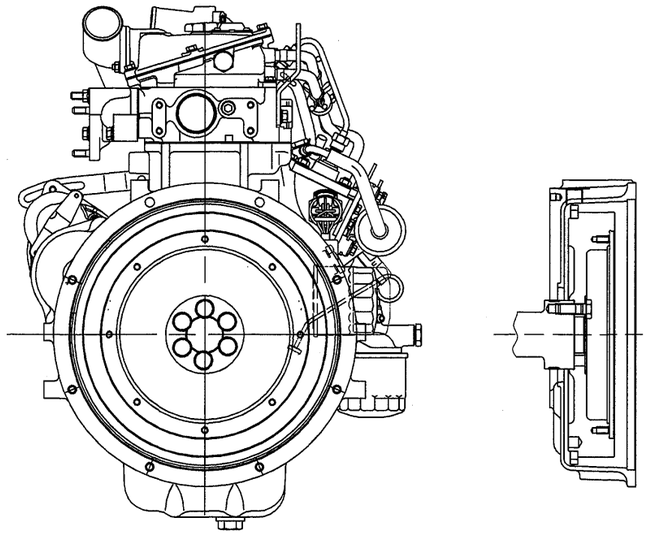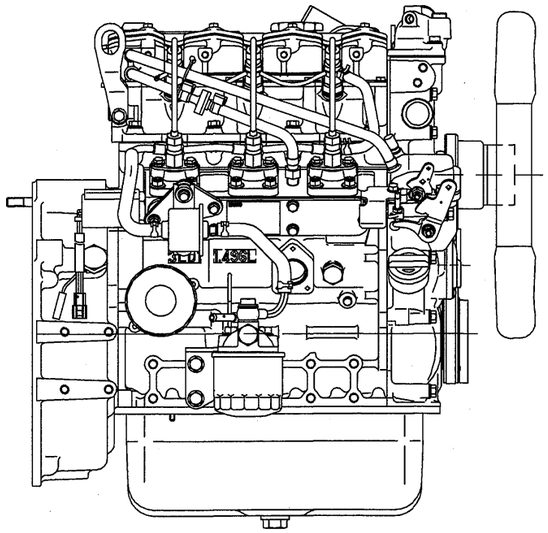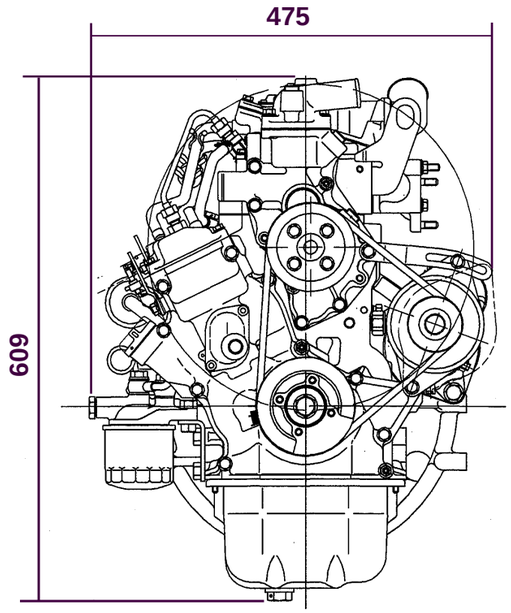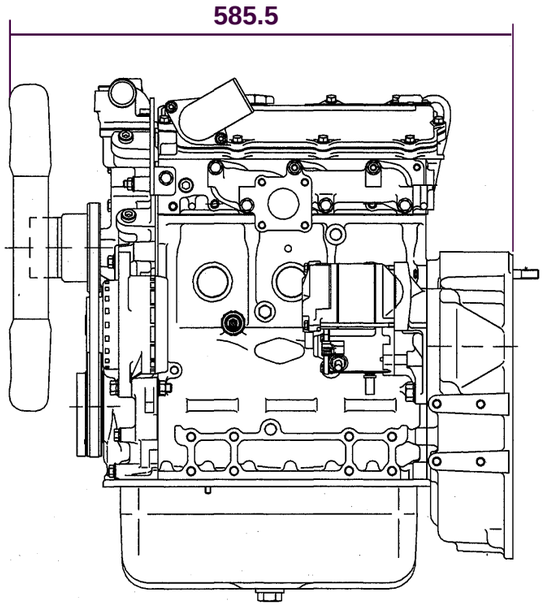ISUZU DIESEL ENGINE 3LD1